US006304131B1

(12) **United States Patent**
Huggins et al.

(10) **Patent No.: US 6,304,131 B1**
(45) **Date of Patent: Oct. 16, 2001**

(54) **HIGH POWER SUPPLY RIPPLE REJECTION INTERNALLY COMPENSATED LOW DROP-OUT VOLTAGE REGULATOR USING PMOS PASS DEVICE**

(75) Inventors: **Mark Wayne Huggins**, Rowlett; **Gabriel Alfonso Rincon-Mora**, Allen, both of TX (US)

(73) Assignee: **Texas Instruments Incorporated**, Dallas, TX (US)

(*) Notice: Subject to any disclaimer, the term of this patent is extended or adjusted under 35 U.S.C. 154(b) by 0 days.

(21) Appl. No.: **09/510,083**

(22) Filed: **Feb. 22, 2000**

(51) **Int. Cl.**[7] **G05F 1/10**
(52) **U.S. Cl.** **327/538**; 327/382
(58) **Field of Search** 327/382, 538, 327/540, 541, 542, 543

(56) **References Cited**

U.S. PATENT DOCUMENTS

5,563,501 * 10/1996 Chan 323/282
5,631,598 * 5/1997 Miranda et al. 327/540

* cited by examiner

Primary Examiner—Jeffrey Zweizig
(74) *Attorney, Agent, or Firm*—Dwight N. Holmbo; Wade James Brady III; Frederick J. Telecky Jr.

(57) **ABSTRACT**

A high power supply ripple rejection internally compensated low drop-out voltage regulator using an output PMOS pass device. The voltage regulator uses an intermediate amplifier stage configured from a common source, current mirror loaded PMOS device to replace the more conventional source follower impedance buffer associated with conventional Miller compensation techniques. Compensation is achieved through use of a small internal capacitor that provides a very low frequency dominant pole at the output of the input stage while effectively pushing out the two other poles at the outputs of the second and third gain stages to a frequency well outside of the unity gain frequency to ensure closed loop stability. High, wide bandwidth PSRR is achieved through an integrated circuit implementation of three voltage gain stages compensated by a nested active Miller compensation technique that does not impedance shunt the output series PMOS pass device.
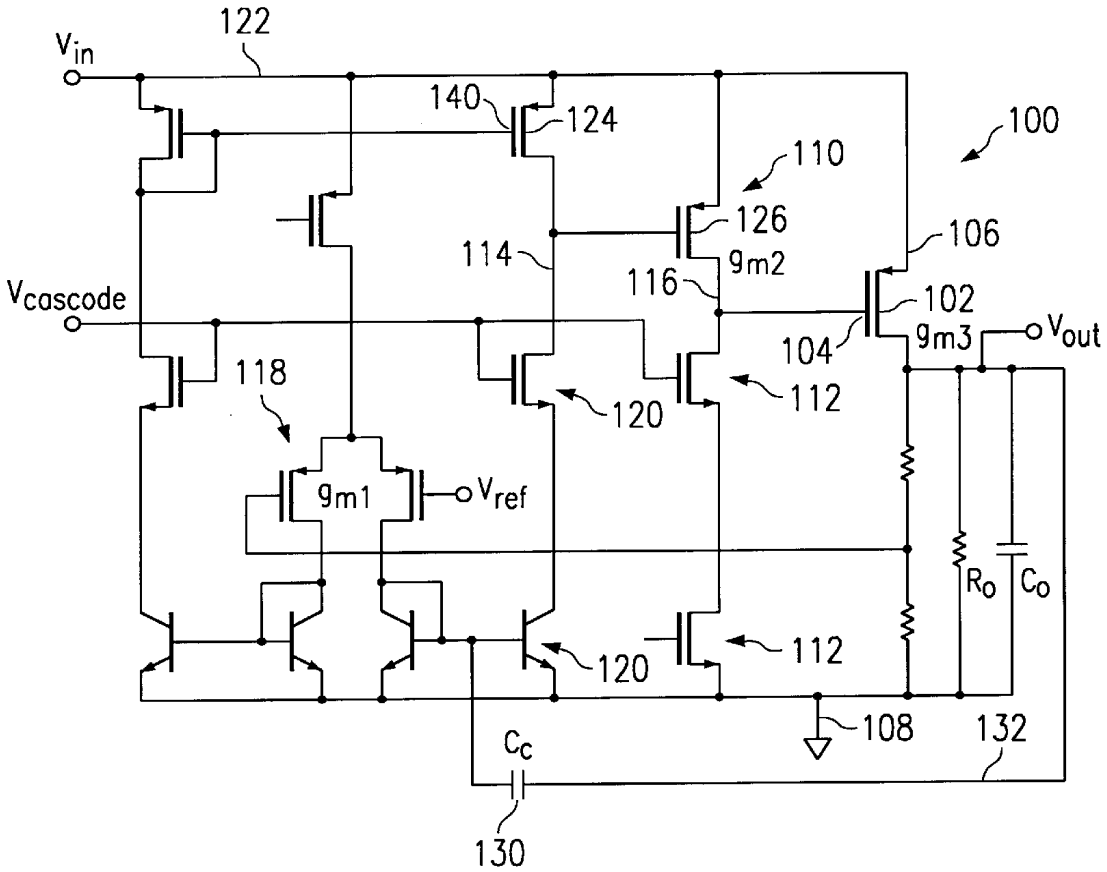
40 Claims, 1 Drawing Sheet